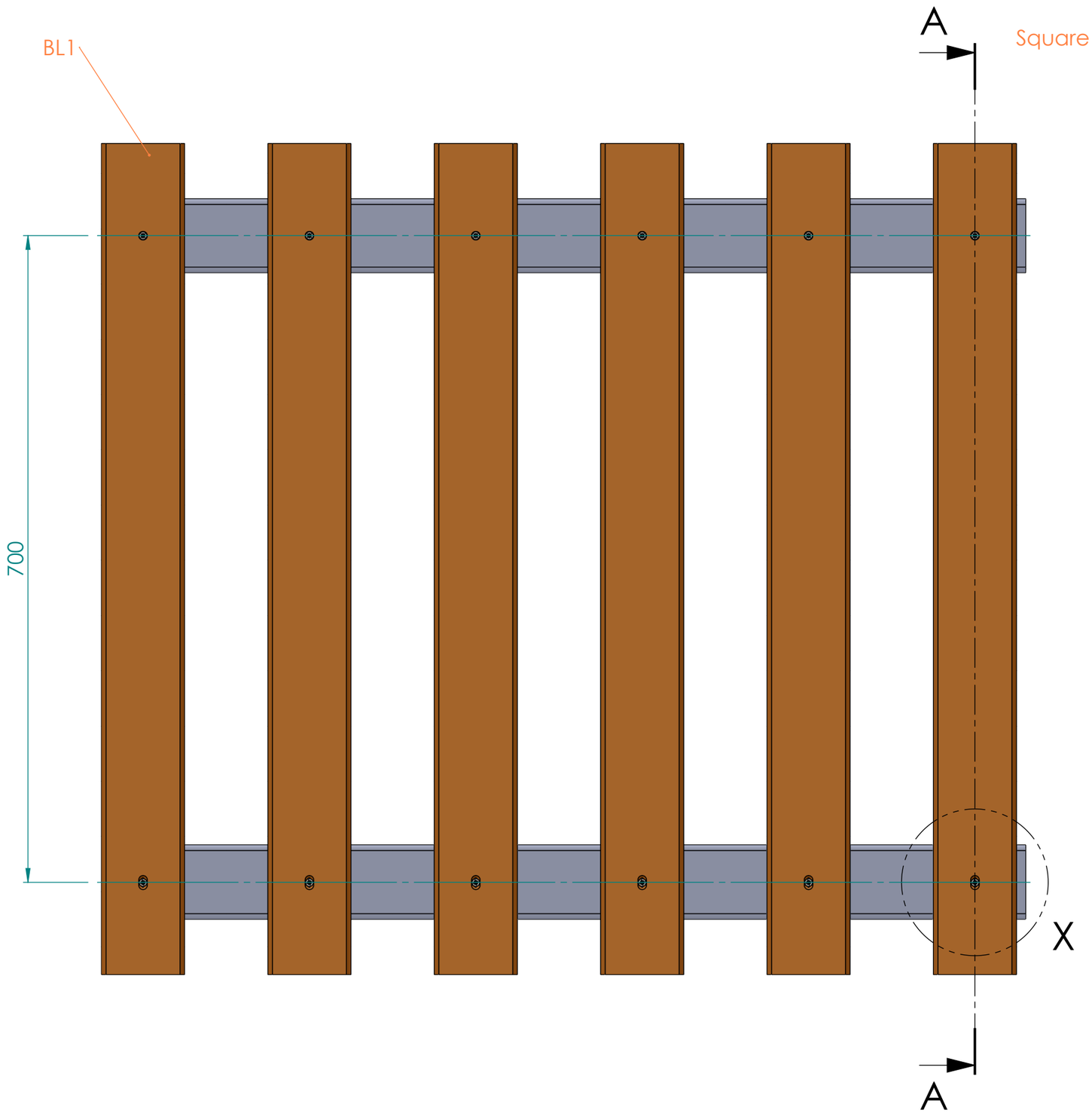

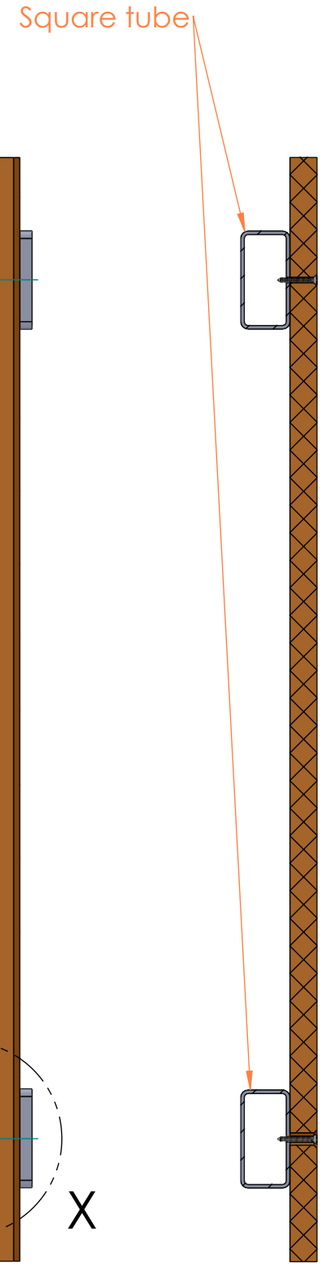

A-A

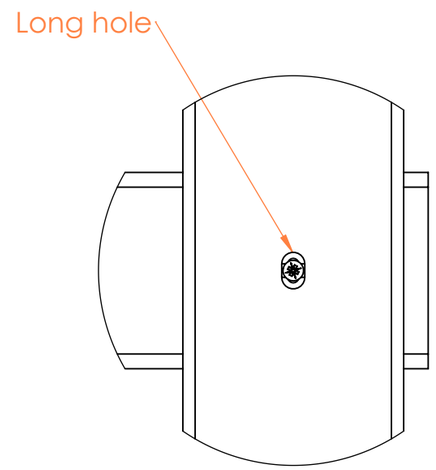

Detail X
Scale 2 : 5

Temperature of planks	per m
0°C	5 mm
12°C	4 mm
24°C	3 mm
36°C	2 mm
48°C	1 mm

BL1	6 m/m²
	±5,7kg/m²