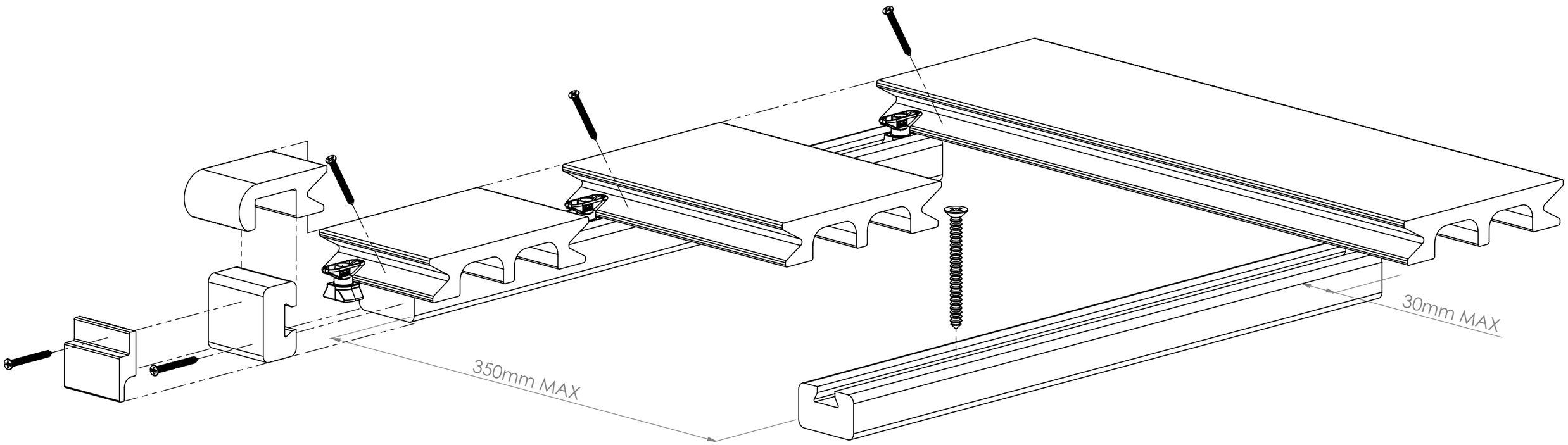
350mm MAX
30mm MAX

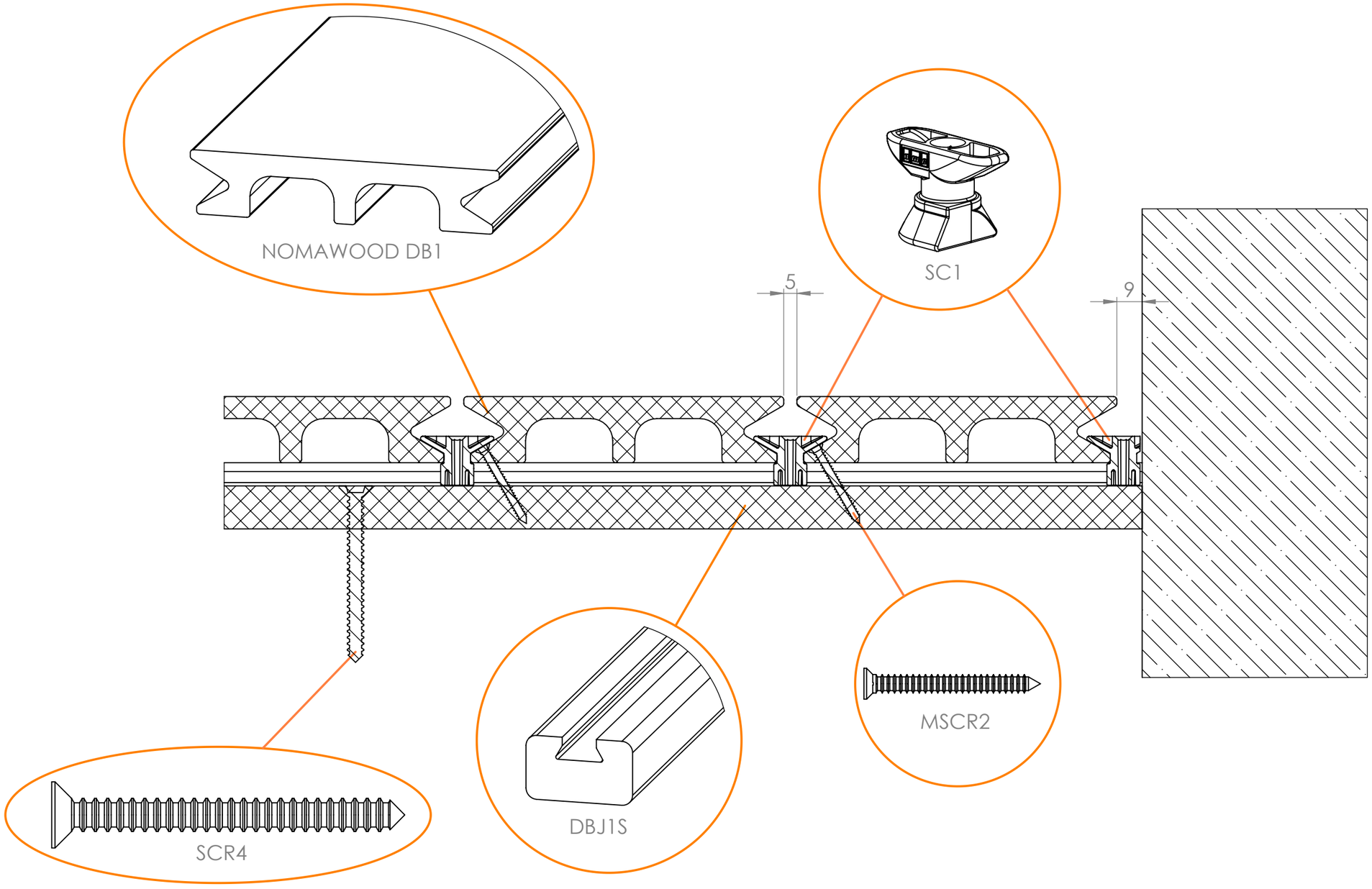
NOMAWOOD DB1
SC1
5
9
MSCR2
DBJ1S
SCR4